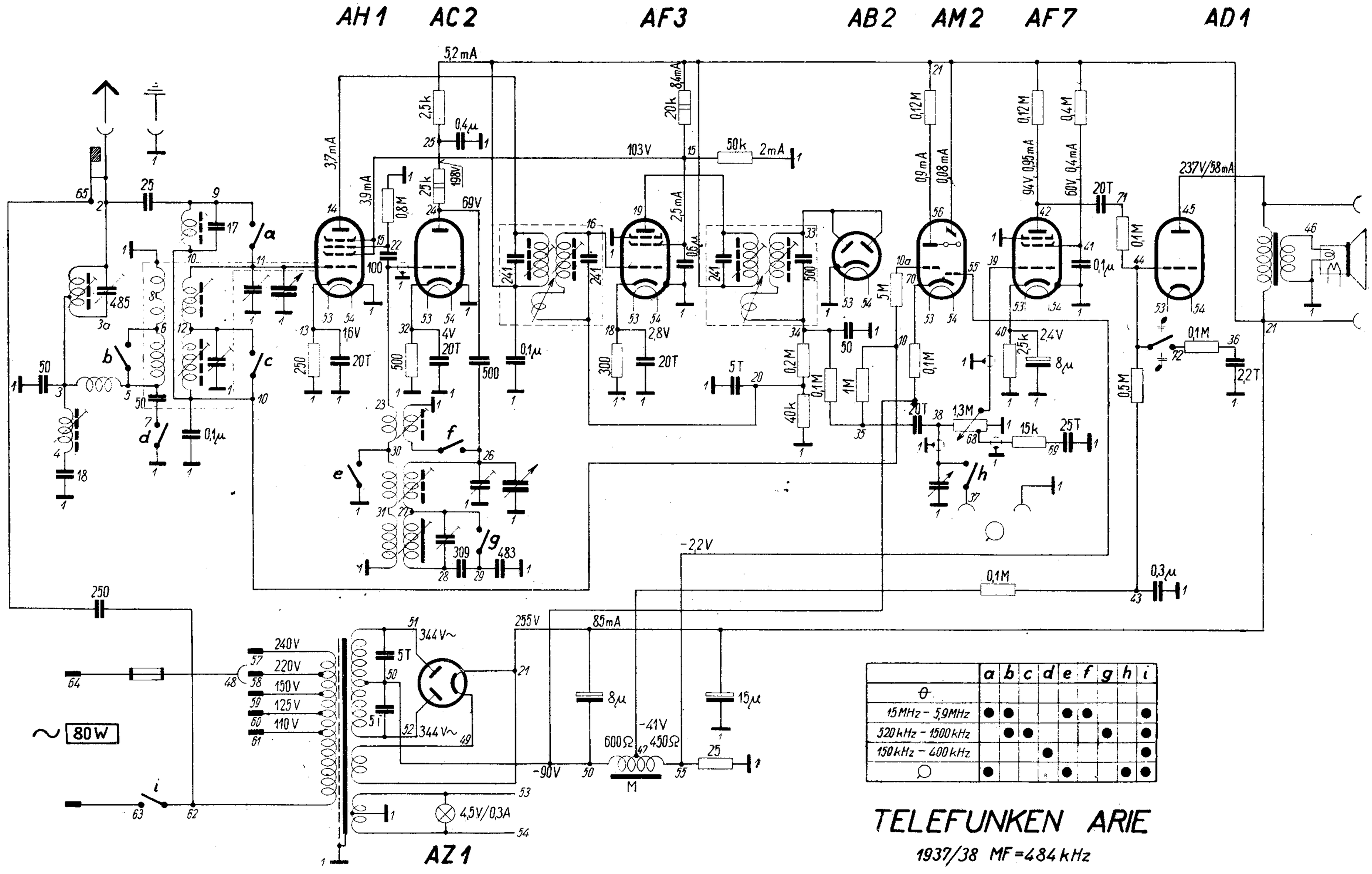

	a	b	c	d	e	f	g	h	i
θ									
15 MHz – 5,9 MHz	●	●			●	●			●
520 kHz – 1500 kHz		●	●				●		●
150 kHz – 400 kHz				●					●
○	●				●			●	●

TELEFUNKEN ARIE

1937/38 MF = 484 kHz