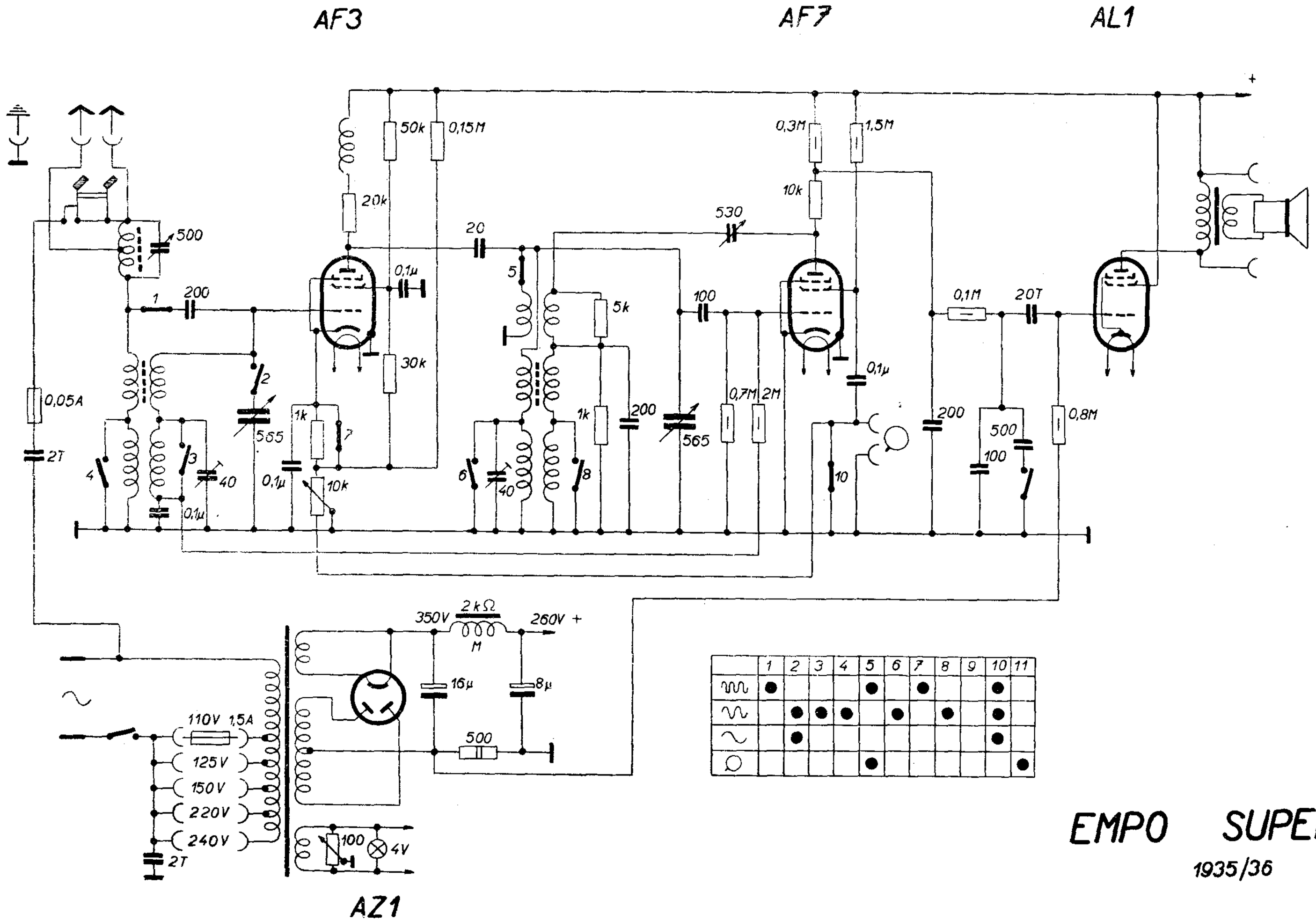

	1	2	3	4	5	6	7	8	9	10	11
	●				●		●			●	
		●	●	●		●		●		●	
		●								●	
					●						●

EMPO SUPERIOR

1935/36